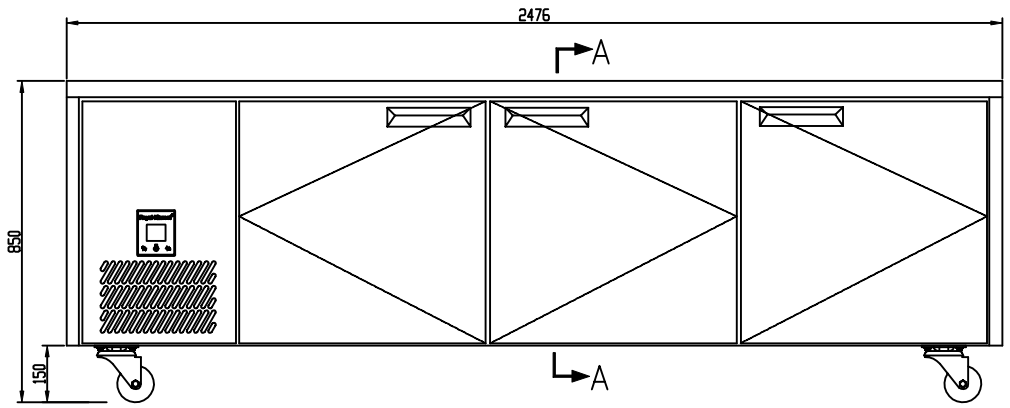

ELEVATION
???

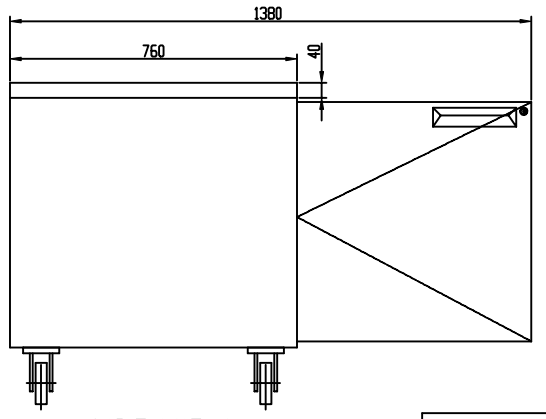

SIDE VIEW
????

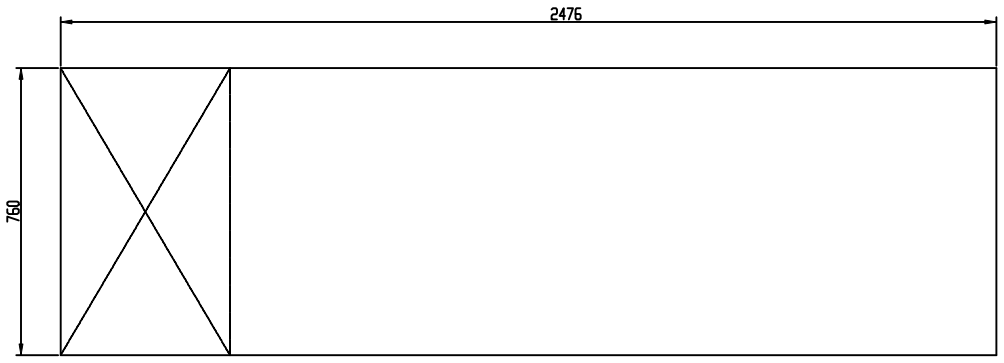

PLAIN
???

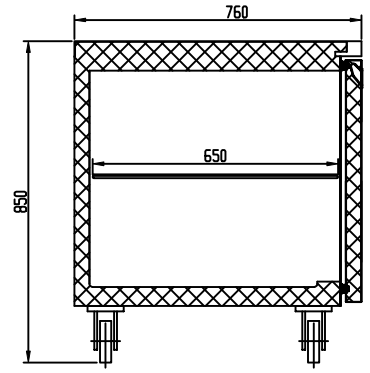

SECTION VIEW
?????

M-PW7T3HHH

??		
?	???	????304#??? ???????
?	???	304#2B
	????	??????35????????
	????	/
	????	-2/+4?
	????	??
	???	????????
	???	R134a
	??	/
	??	??220V 50HZ 1PHASE
	????	??10A?????
??		?1000mm? ±1mm
		?2000mm? ±2mm

??????????:

??:

Project No : ????:	Drawn: ??	???
Project: ????:	Date: ??	9/4/2018
	Units: ??	mm
Title: ????: ??????	Qty ??	1
	Checked ??	??
Drawing No: ????:	Approved ??	??

?:??????????????,??????!!!

Alteration By	Date	DESCRIPTION
	/	/
??	??	????